MC74HCT74A

Dual D Flip-Flop with Set and Reset with LSTTL Compatible Inputs

High–Performance Silicon–Gate CMOS

The MC74HCT74A is identical in pinout to the LS74. This device may be used as a level converter for interfacing TTL or NMOS outputs to High Speed CMOS inputs.

This device consists of two D flip–flops with individual Set, Reset, and Clock inputs. Information at a D–input is transferred to the corresponding Q output on the next positive going edge of the clock input. Both Q and $\overline{Q}$ outputs are available from each flip–flop. The Set and Reset inputs are asynchronous.

- Output Drive Capability: 10 LSTTL Loads
- TTL NMOS Compatible Input Levels
- Outputs Directly Interface to CMOS, NMOS, and TTL
- Operating Voltage Range: 4.5 to 5.5 V
- Low Input Current: 1.0 μA
- In Compliance with the Requirements Defined by JEDEC Standard No. 7A
- Chip Complexity: 136 FETs or 34 Equivalent Gates

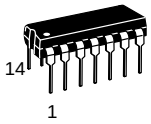

N SUFFIX
PLASTIC PACKAGE
CASE 646–06

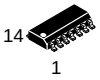

D SUFFIX
SOIC PACKAGE
CASE 751A–03

ORDERING INFORMATION

MC54HCTXXAJ	Ceramic
MC74HCTXXAN	Plastic
MC74HCTXXAD	SOIC

PIN ASSIGNMENT

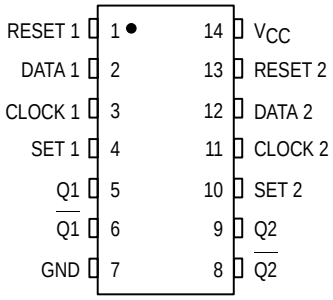

LOGIC DIAGRAM

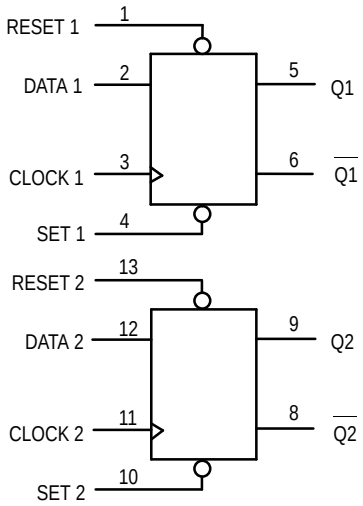

PIN 14 = V_{CC}
PIN 7 = GND

FUNCTION TABLE

Inputs				Outputs	
Set	Reset	Clock	Data	Q	$\overline{Q}$
L	H	X	X	H	L
H	L	X	X	L	H
L	L	X	X	H*	H*
H	H	↑	H	H	L
H	H	↑	L	L	H
H	H	L	X	No Change	
H	H	H	X	No Change	
H	H	↓	X	No Change	

* Both outputs will remain high as long as Set and Reset are low, but the output states are unpredictable if Set and Reset go high simultaneously.

Design Criteria	Value	Units
Internal Gate Count*	34	ea.
Internal Gate Propagation Delay	1.5	ns
Internal Gate Power Dissipation	5.0	μW
Speed Power Product	.0075	pJ

* Equivalent to a two–input NAND gate.

© Motorola, Inc. 1995

MAXIMUM RATINGS*

Symbol	Parameter	Value	Unit
V_{CC}	DC Supply Voltage (Referenced to GND)	– 0.5 to + 7.0	V
V_{in}	DC Input Voltage (Referenced to GND)	– 1.5 to V_{CC} + 1.5	V
V_{out}	DC Output Voltage (Referenced to GND)	– 0.5 to V_{CC} + 0.5	V
I_{in}	DC Input Current, per Pin	± 20	mA
I_{out}	DC Output Current, per Pin	± 25	mA
I_{CC}	DC Supply Current, V_{CC} and GND Pins	± 50	mA
P_D	Power Dissipation in Still Air Plastic DIP†	750	mW
	SOIC Package†	500	
T_{stg}	Storage Temperature	– 65 to + 150	°C
T_L	Lead Temperature, 1 mm from Case for 10 Seconds (Plastic DIP or SOIC Package)	260	°C

This device contains protection circuitry to guard against damage due to high static voltages or electric fields. However, precautions must be taken to avoid applications of any voltage higher than maximum rated voltages to this high–impedance circuit. For proper operation, V_{in} and V_{out} should be constrained to the range GND ≤ (V_{in} or V_{out}) ≤ V_{CC}.

Unused inputs must always be tied to an appropriate logic voltage level (e.g., either GND or V_{CC}). Unused outputs must be left open.

* Maximum Ratings are those values beyond which damage to the device may occur.
Functional operation should be restricted to the Recommended Operating Conditions.

†Derating — Plastic DIP: –10mW/°C from 65° to 125°C
SOIC Package: –7mW/°C from 65° to 125°C

For high frequency or heavy load considerations, see Chapter 2 of the Motorola High–Speed CMOS Data Book (DL129/D).

RECOMMENDED OPERATING CONDITIONS

Symbol	Parameter	Min	Max	Unit
V_{CC}	DC Supply Voltage (Referenced to GND)	4.5	5.5	V
V_{in}, V_{out}	DC Input Voltage, Output Voltage (Referenced to GND)	0	V_{CC}	V
T_A	Operating Temperature, All Package Types	– 55	+ 125	°C
t_r, t_f	Input Rise and Fall Time (Figure 1)	0	500	ns

DC ELECTRICAL CHARACTERISTICS (Voltages Referenced to GND)

Symbol	Parameter	Test Conditions	V_{CC} V	Guaranteed Limit			Unit
				– 55 to 25°C	≤ 85°C	≤ 125°C	
V_{IH}	Minimum High–Level Input Voltage	V_{out} = 0.1 V or V_{CC} – 0.1 V $\|I_{out}\|$ ≤ 20 μA	4.5 5.5	2.0 2.0	2.0 2.0	2.0 2.0	V
V_{IL}	Maximum Low–Level Input Voltage	V_{out} = 0.1 V or V_{CC} – 0.1 V $\|I_{out}\|$ ≤ 20 μA	4.5 5.5	0.8 0.8	0.8 0.8	0.8 0.8	V
V_{OH}	Minimum High–Level Output Voltage	V_{in} = V_{IH} or V_{IL} $\|I_{out}\|$ ≤ 20 μA	4.5 5.5	4.4 5.4	4.4 5.4	4.4 5.4	V
		V_{in} = V_{IH} or V_{IL} $\|I_{out}\|$ ≤ 4.0 mA	4.5	3.98	3.84	3.7	
V_{OL}	Maximum Low–Level Output Voltage	V_{in} = V_{IH} or V_{IL} $\|I_{out}\|$ ≤ 20 μA	4.5 5.5	0.1 0.1	0.1 0.1	0.1 0.1	V
		V_{in} = V_{IH} or V_{IL} $\|I_{out}\|$ ≤ 4.0 mA	4.5	0.26	0.33	0.4	
I_{in}	Maximum Input Leakage Current	V_{in} = V_{CC} or GND	5.5	± 0.1	± 1.0	± 1.0	μA
I_{CC}	Maximum Quiescent Supply Current (per Package)	V_{in} = V_{CC} or GND I_{out} = 0 μA	5.5	2.0	20	80	μA

ΔI_{CC}	Additional Quiescent Supply Current	V_{in} = 2.4 V, Any One Input V_{in} = V_{CC} or GND, Other Inputs I_{out} = 0 μA		≥ – 55°C	25°C to 125°C	
			5.5	2.9	2.4	mA

NOTE: Information on typical parametric values can be found in Chapter 2 of the Motorola High–Speed CMOS Data Book (DL129/D).

AC ELECTRICAL CHARACTERISTICS (V_{CC} = 5.0 V ± 10%, C_L = 50 pF, Input $t_r = t_f$ = 6.0 ns)

Symbol	Parameter	Guaranteed Limit			Unit
		– 55 to 25°C	≤ 85°C	≤ 125°C	
f_{max}	Maximum Clock Frequency (50% Duty Cycle) (Figures 1 and 4)	30	24	20	MHz
t_{PLH}, t_{PHL}	Maximum Propagation Delay, Clock to Q or $\overline{Q}$ (Figures 1 and 4)	24	30	36	ns
t_{PLH}, t_{PHL}	Maximum Propagation Delay, Set or Reset to Q or $\overline{Q}$ (Figures 2 and 4)	24	30	36	ns
t_{TLH}, t_{THL}	Maximum Output Transition Time, Any Output (Figures 1 and 4)	15	19	22	ns
C_{in}	Maximum Input Capacitance	10	10	10	pF

NOTE: For propagation delays with loads other than 50 pF, and information on typical parametric values, see Chapter 2 of the Motorola High–Speed CMOS Data Book (DL129/D).

		Typical @ 25°C, V_{CC} = 5.0 V	
C_{PD}	Power Dissipation Capacitance (Per Enabled Output)*	130	pF

* Used to determine the no–load dynamic power consumption: $P_D = C_{PD} V_{CC}^2 f + I_{CC} V_{CC}$. For load considerations, see Chapter 2 of the Motorola High–Speed CMOS Data Book (DL129/D).

TIMING REQUIREMENTS (V_{CC} = 5.0 V ± 10%, C_L = 50 pF, Input $t_r = t_f$ = 6.0 ns)

Symbol	Parameter	Fig.	Guaranteed Limit						Units
			– 55 to 25°C		≤ 85°C		≤ 125°C		
			Min	Max	Min	Max	Min	Max	
t_{su}	Minimum Setup Time, Data to Clock	3	15		19		22		ns
t_h	Minimum Hold Time, Clock to Data	3	3		3		3		ns
t_{rec}	Minimum Recovery Time, Set or Reset Inactive to Clock	2	6		8		9		ns
t_w	Minimum Pulse Width, Clock	1	15		19		22		ns
t_w	Minimum Pulse Width, Set or Reset	2	15		19		22		ns
t_r, t_f	Maximum Input Rise and Fall Times	1		500		500		500	ns

SWITCHING WAVEFORMS

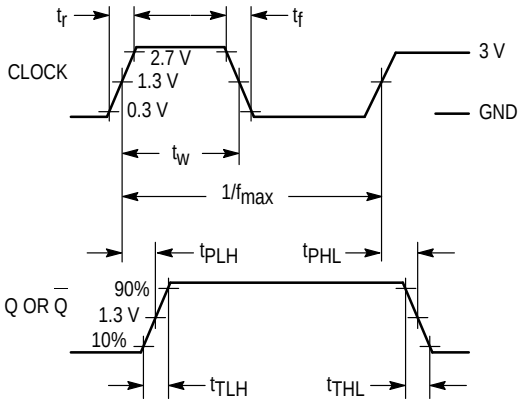

Figure 1.

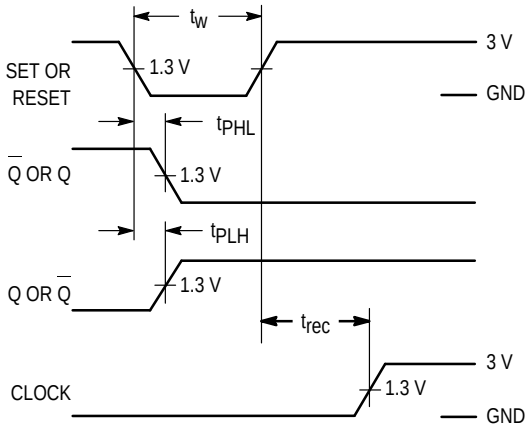

Figure 2.

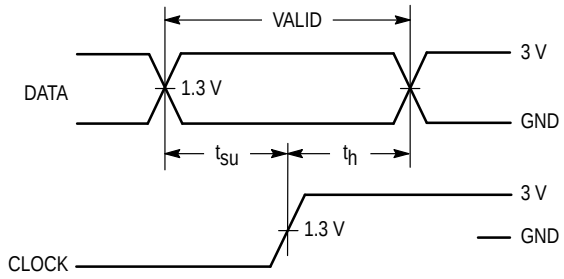

Figure 3.

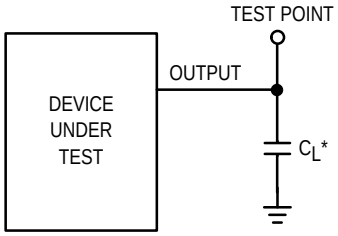

* Includes all probe and jig capacitance

Figure 4.

EXPANDED LOGIC DIAGRAM

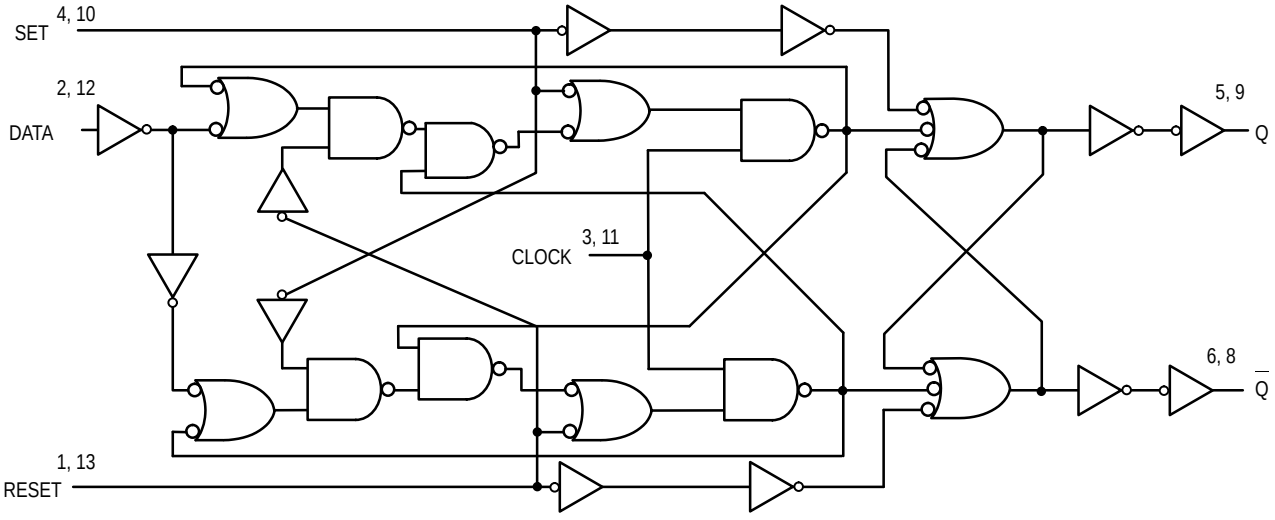

OUTLINE DIMENSIONS

N SUFFIX
PLASTIC DIP PACKAGE
CASE 646–06
ISSUE L

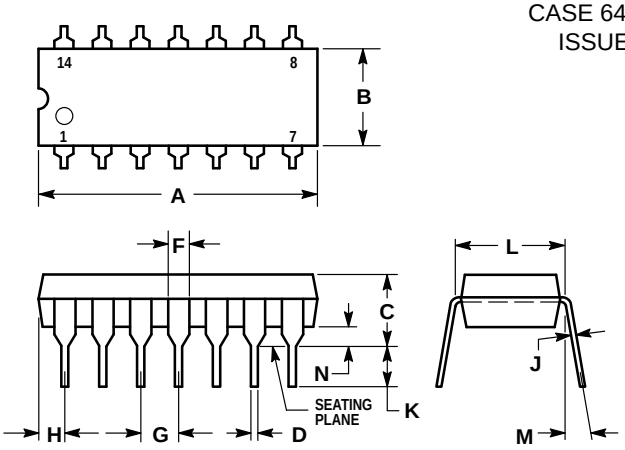

NOTES:
1. LEADS WITHIN 0.13 (0.005) RADIUS OF TRUE POSITION AT SEATING PLANE AT MAXIMUM MATERIAL CONDITION.
2. DIMENSION L TO CENTER OF LEADS WHEN FORMED PARALLEL.
3. DIMENSION B DOES NOT INCLUDE MOLD FLASH.
4. ROUNDED CORNERS OPTIONAL.

	INCHES		MILLIMETERS	
DIM	MIN	MAX	MIN	MAX
A	0.715	0.770	18.16	19.56
B	0.240	0.260	6.10	6.60
C	0.145	0.185	3.69	4.69
D	0.015	0.021	0.38	0.53
F	0.040	0.070	1.02	1.78
G	0.100 BSC		2.54 BSC	
H	0.052	0.095	1.32	2.41
J	0.008	0.015	0.20	0.38
K	0.115	0.135	2.92	3.43
L	0.300 BSC		7.62 BSC	
M	0°	10°	0°	10°
N	0.015	0.039	0.39	1.01

D SUFFIX
PLASTIC SOIC PACKAGE
CASE 751A–03
ISSUE F

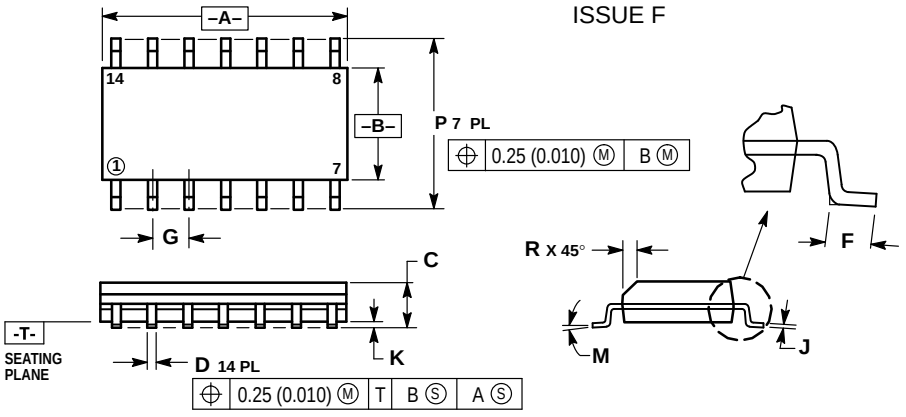

NOTES:
1. DIMENSIONING AND TOLERANCING PER ANSI Y14.5M, 1982.
2. CONTROLLING DIMENSION: MILLIMETER.
3. DIMENSIONS A AND B DO NOT INCLUDE MOLD PROTRUSION.
4. MAXIMUM MOLD PROTRUSION 0.15 (0.006) PER SIDE.
5. DIMENSION D DOES NOT INCLUDE DAMBAR PROTRUSION. ALLOWABLE DAMBAR PROTRUSION SHALL BE 0.127 (0.005) TOTAL IN EXCESS OF THE D DIMENSION AT MAXIMUM MATERIAL CONDITION.

	MILLIMETERS		INCHES	
DIM	MIN	MAX	MIN	MAX
A	8.55	8.75	0.337	0.344
B	3.80	4.00	0.150	0.157
C	1.35	1.75	0.054	0.068
D	0.35	0.49	0.014	0.019
F	0.40	1.25	0.016	0.049
G	1.27 BSC		0.050 BSC	
J	0.19	0.25	0.008	0.009
K	0.10	0.25	0.004	0.009
M	0°	7°	0°	7°
P	5.80	6.20	0.228	0.244
R	0.25	0.50	0.010	0.019

Motorola reserves the right to make changes without further notice to any products herein. Motorola makes no warranty, representation or guarantee regarding the suitability of its products for any particular purpose, nor does Motorola assume any liability arising out of the application or use of any product or circuit, and specifically disclaims any and all liability, including without limitation consequential or incidental damages. “Typical” parameters can and do vary in different applications. All operating parameters, including “Typicals” must be validated for each customer application by customer’s technical experts. Motorola does not convey any license under its patent rights nor the rights of others. Motorola products are not designed, intended, or authorized for use as components in systems intended for surgical implant into the body, or other applications intended to support or sustain life, or for any other application in which the failure of the Motorola product could create a situation where personal injury or death may occur. Should Buyer purchase or use Motorola products for any such unintended or unauthorized application, Buyer shall indemnify and hold Motorola and its officers, employees, subsidiaries, affiliates, and distributors harmless against all claims, costs, damages, and expenses, and reasonable attorney fees arising out of, directly or indirectly, any claim of personal injury or death associated with such unintended or unauthorized use, even if such claim alleges that Motorola was negligent regarding the design or manufacture of the part. Motorola and M are registered trademarks of Motorola, Inc. Motorola, Inc. is an Equal Opportunity/Affirmative Action Employer.

How to reach us:
USA/EUROPE: Motorola Literature Distribution;
P.O. Box 20912; Phoenix, Arizona 85036. 1–800–441–2447

MFAX: RMFAX0@email.sps.mot.com –TOUCHTONE (602) 244–6609
INTERNET: http://Design–NET.com

JAPAN: Nippon Motorola Ltd.; Tatsumi–SPD–JLDC, Toshikatsu Otsuki,
6F Seibu–Butsuryu–Center, 3–14–2 Tatsumi Koto–Ku, Tokyo 135, Japan. 03–3521–8315

HONG KONG: Motorola Semiconductors H.K. Ltd.; 8B Tai Ping Industrial Park,
51 Ting Kok Road, Tai Po, N.T., Hong Kong. 852–26629298